Garage Door Opener - "Homelink"

From 2004 m. y.

Main fuse

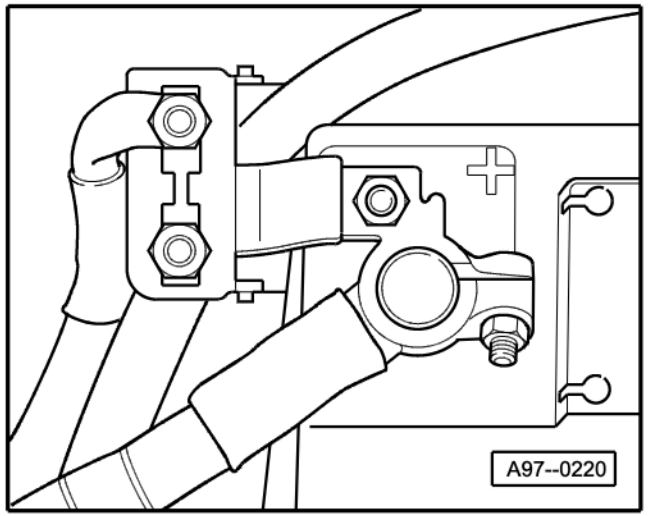

- on the Battery

Fuse holder

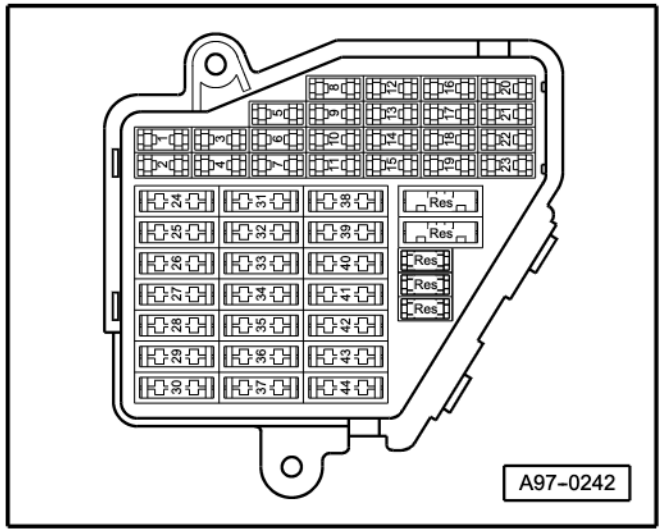

Protected by copyright. Copying for private or commercial purposes, in part or in whole, is not permitted unless authorised by AUDI AG. AUDI AG does not guarantee or accept any liability with respect to the correctness of information in this document. Copyright by AUDI AG.

- Instrument panel driver side

Fuse Colors
30 A - Green
25 A - Withe
20 A - Yellow
15 A - Blue
10 A - Red
7,5 A - Brown
5 A - Beige

Note:

- *Fuse in fusebox from 23 onwards are numbered 223 onwards in Current Flow Diagram.*

Connector station A-pillar

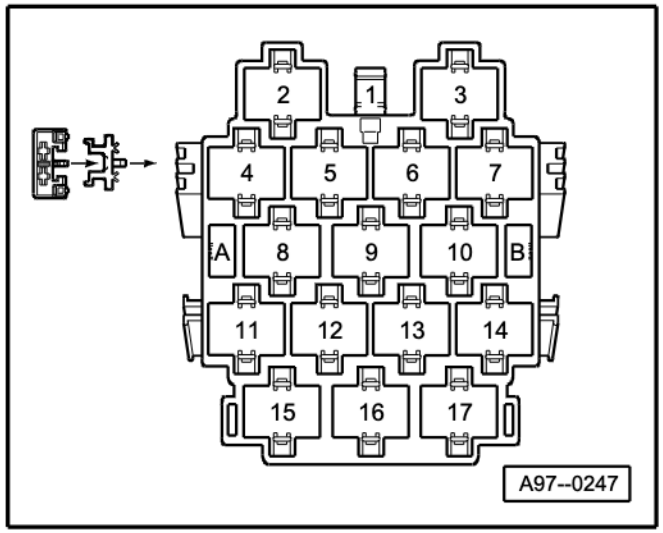

Protected by copyright. Copying for private or commercial purposes, in part or in whole, is not permitted unless authorised by AUDI AG. AUDI AG does not guarantee or accept any liability with respect to the correctness of information in this document. Copyright by AUDI AG.

- behind side trim, left

8 - 10-Pin Connector, blue (T10i)
9 - 17-Pin Connector, dark brown (T17g)
10 - 17-Pin Connector, orange (T17f)

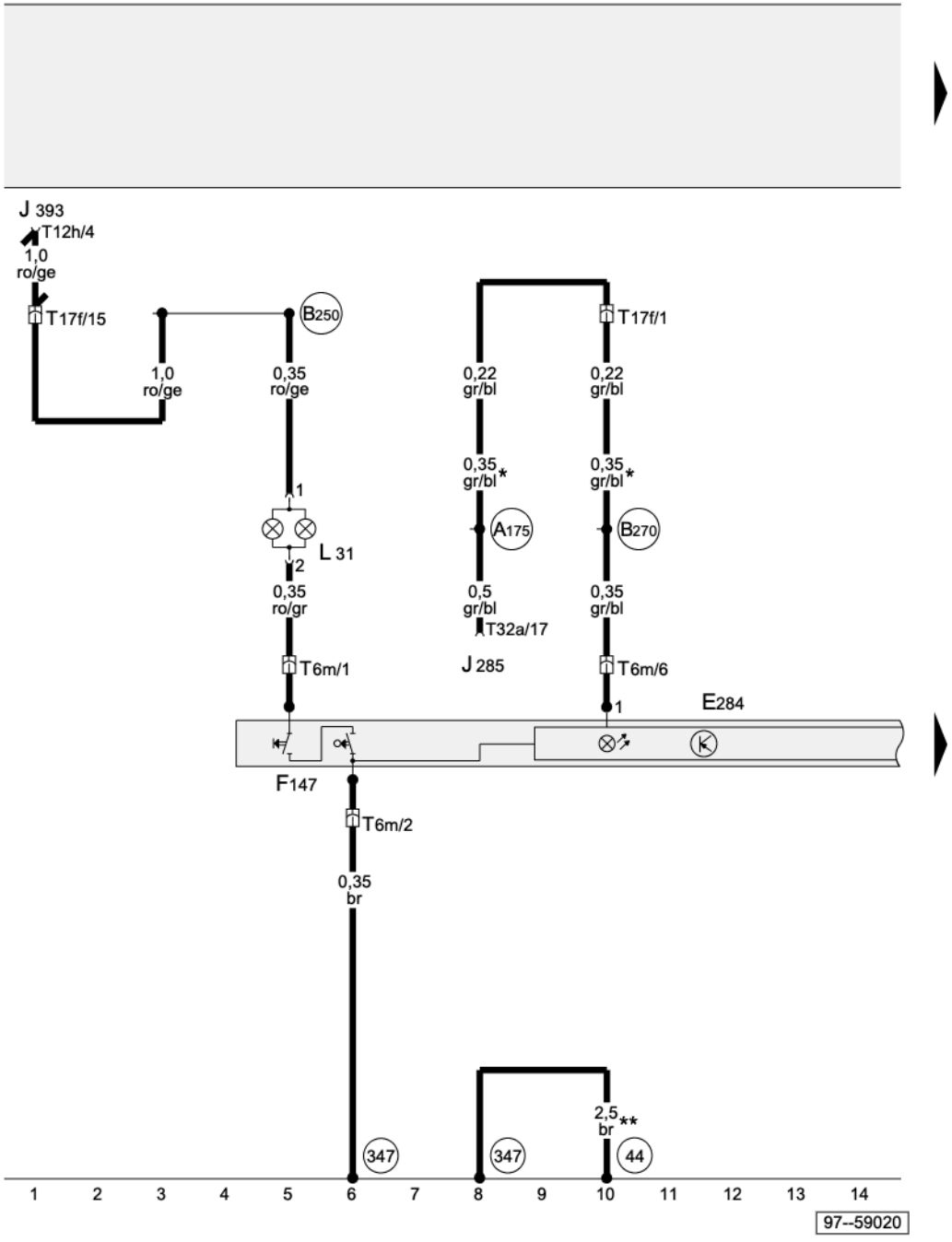

Garage Door Opener Control Head, Ground Connection

E284	Garage Door Opener Control Head
F147	Left Make-Up Mirror Light Switch
J285	Control module with indicator unit ininstrument panel insert
J393	Central control module for comfort system
L31	Make-up Mirror Light
T6m	6-Pin Connector, on the Garage Door Opener Control Head
T12h	12-Pin Connector, black, on central control module for comfort system (used to be Connector 1)
T17f	17-Pin Connector, orange, connector station A-pillar, left
T32a	32-Pin Connector, green, on instrument panel insert
44	Ground connection, on left A-pillar, lower part`
347	Ground Connection (in roof wiring harness)
A175	Connection (58s) (in instrument panel wiring harness)
B250	Plus Connection (in roof wiring harness)
B270	Connection (58s)(in roof wiring harness)
Q	from January 2005
QQ	4.0 mm² cross-section where applicable

ws	=	white
sw	=	black
ro	=	red
br	=	brown
gn	=	green
bl	=	blue
gr	=	grey
li	=	lilac
ge	=	yellow
or	=	orange
rs	=	pink

Protected by copyright. Copying for private or commercial purposes, in part or in whole, is not permitted unless authorised by AUDI AG. AUDI AG does not guarantee or accept any liability with respect to the correctness of information in this document. Copyright by AUDI AG.

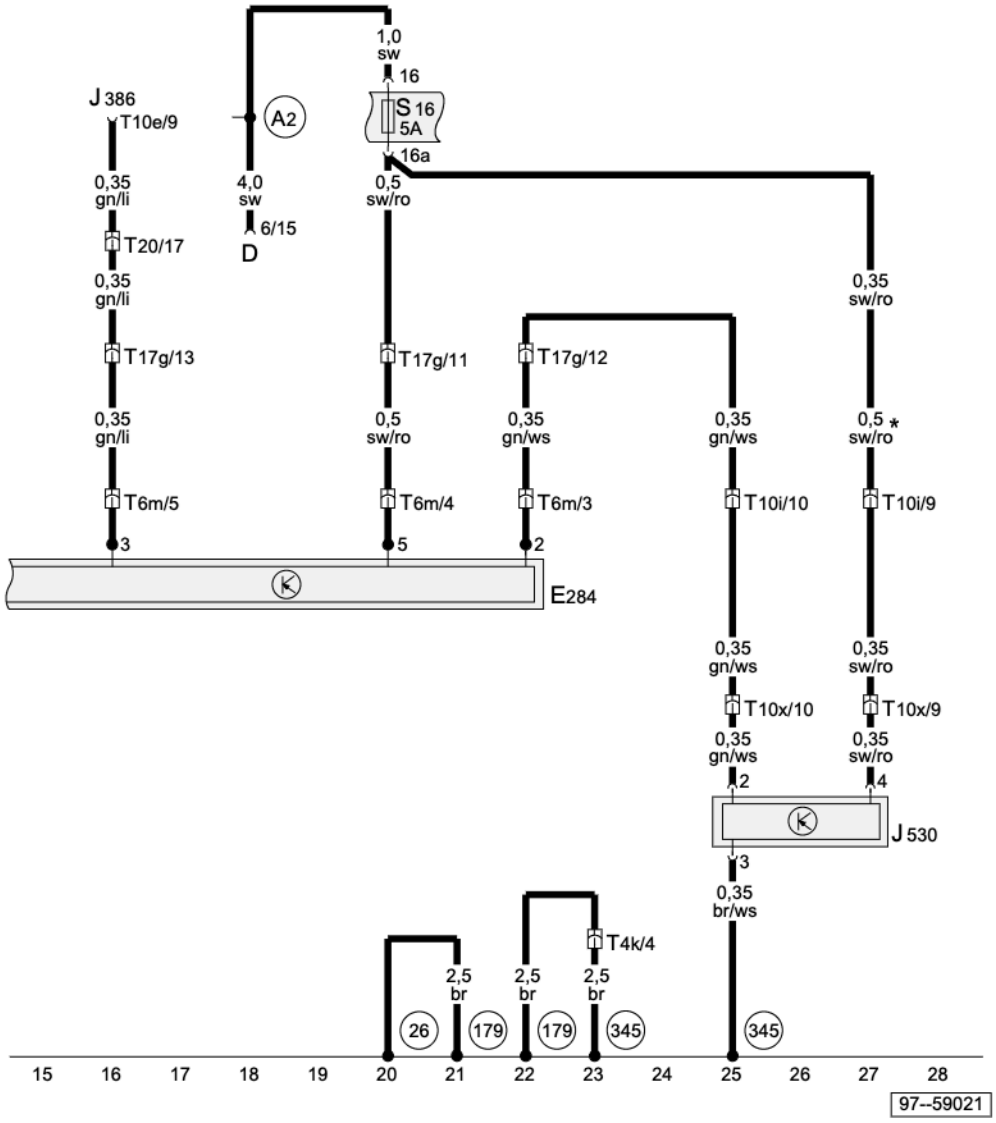

Garage Door Opener Control Head, Garage Door Opener Control Module, Fuse

D	Ignition/Starter Switch
E284	Garage Door Opener Control Head
J386	Door control module, driver side
J530	Garage Door Opener Control Module
S16	Fuse
T4k	4-Pin Connector, black, near front bumper
T6m	6-Pin Connector, on the Garage Door Opener Control Head
T10e	10-Pin Connector, on Door control module, driver side
T10i	10-Pin Connector, blue, connector station A-pillar, left
T10x	10-Pin Connector, black, near front bumper
T17g	17-Pin Connector, dark brown, connector station A-pillar, left
T20	20-Pin Connector, black, door A-pillar, left
26	Ground connection, on front apron
179	Ground connection, in left headlight wiring harness
345	Ground Connection (in bumper wiring harness)
A2	plus connection (15), in instrument panel wiring harness
Q	from January 2005

Protected by copyright. Copying for private or commercial purposes, in part or in whole, is not permitted unless authorised by AUDI AG. AUDI AG does not guarantee or accept any liability with respect to the correctness and completeness of this copy of the original by AUDI AG.

ws	=	white
sw	=	black
ro	=	red
br	=	brown
gn	=	green
bl	=	blue
gr	=	grey
li	=	lilac
ge	=	yellow
or	=	orange
rs	=	pink